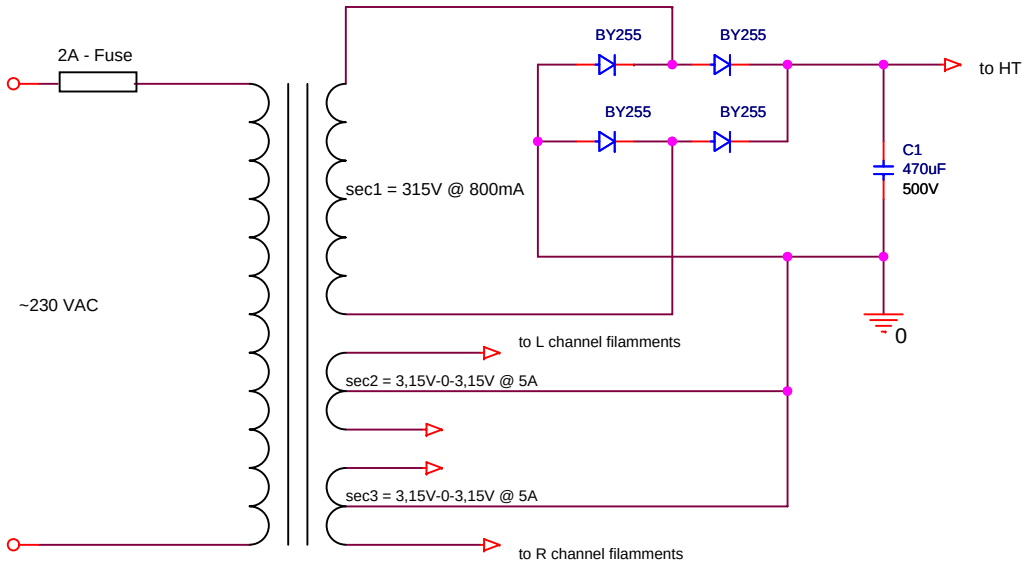

Luis M. Cárdaba		
Title	GEC 30 - Power Supply	
Size A4	Document Number <Doc>	Rev 1.0
Date: Monday, October 17, 2005	Sheet 1 of 1	